5mm Input for Nema17 42mm Fange Stepper Motor

PLE042

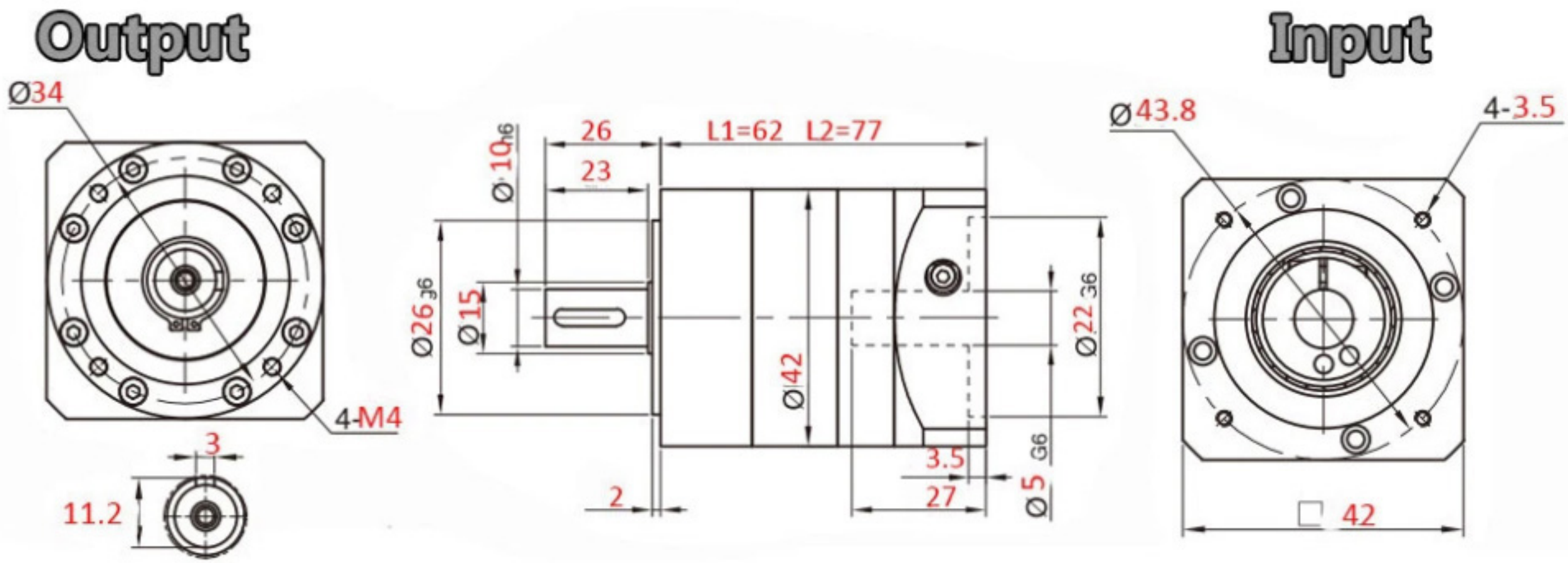

8mm Inputfor 50W 100W Servo Motor

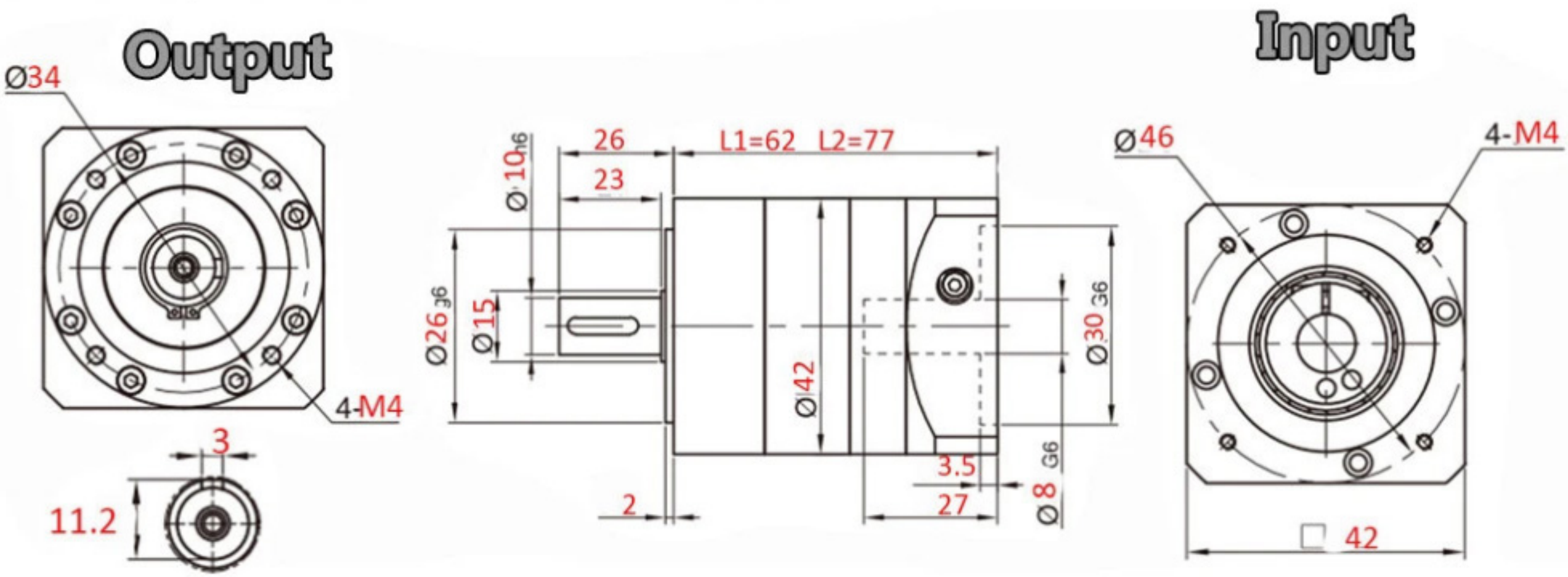

Output Shaft Wth Key

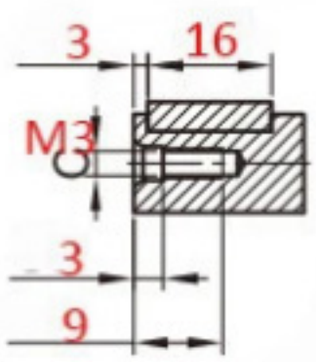

Speed Ratio

1 Stage (L1): 4:1 / 5:1 / 7:1 / 10:1

2 Stage (L2): 20:1 / 25:1 / 35:1 / 40:1 / 50:1 / 70:1 / 100:1

Unit:(mm)